Zadaci V.F 5.2

1.

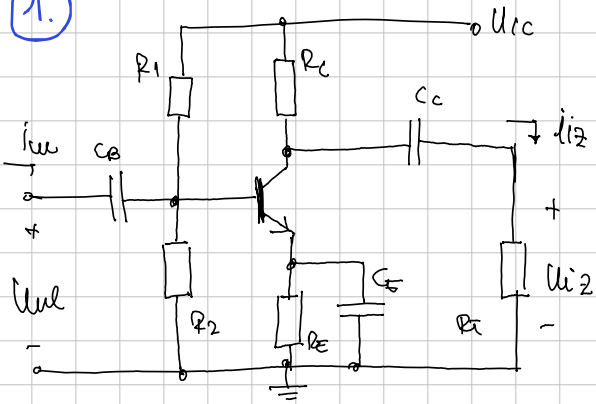

$A_{v0} = ?$ $A_{I0} = ?$

$a_g = ?$ za oba pojačanja

$U_{CC} = 15V$

$C_B = 1\mu F$

$R_1 = 20k\Omega$ $R_C = 1k\Omega$

$R_2 = 10k\Omega$ $R_E = 500\Omega$

$U_T = 25mV$ $R_L = 3k\Omega$ $C_E = 50\mu F$ $C_C = 5\mu F$ $C_{b'c} = 100pF$ $C_{b'e} = 3pF$

$U_\gamma = 0{,}7$ $r_{bb'} = 50\Omega$ $\beta = 180$

STATIKA

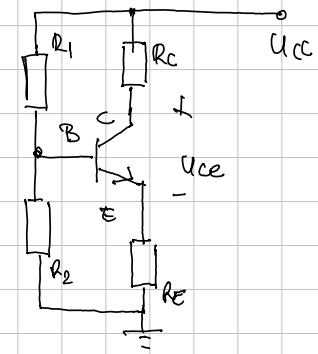

$R_B = R_1 \| R_2 = 6.67k\Omega$

$U_{BB} = \frac{R_2}{R_1+R_2} \cdot U_{CC} \rightarrow U_{BB} = 5V$

$-U_{BB} + R_B \cdot I_{BQ} + U_{BEQ} + I_{BQ}(1+\beta)R_E = 0$

$I_{BQ} = \frac{U_{BB} - U_{BEQ}}{R_B + (1+\beta)R_E} \rightarrow \boxed{I_{BQ} = 52.33\mu A}$

$r_{b'e} = \frac{U_T}{I_{BQ}} \rightarrow \boxed{r_{b'e} = 477.74\Omega}$

$g_m = \frac{I_{CQ}}{U_T}$

$\boxed{g_m = 314\ mA/V}$

Dinamika

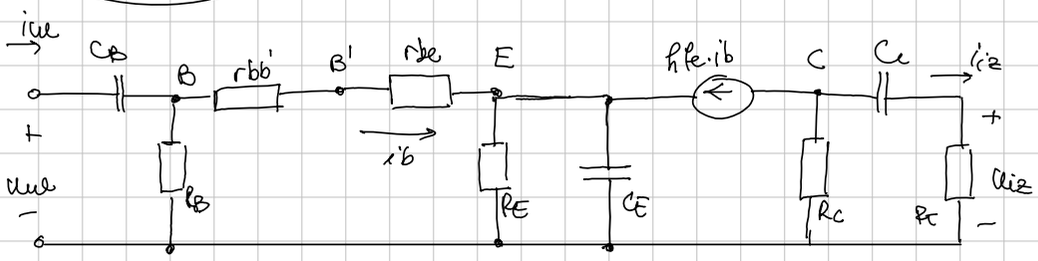

ali budući da gledamo srednje i visoke frekv → svi su C već K.S.

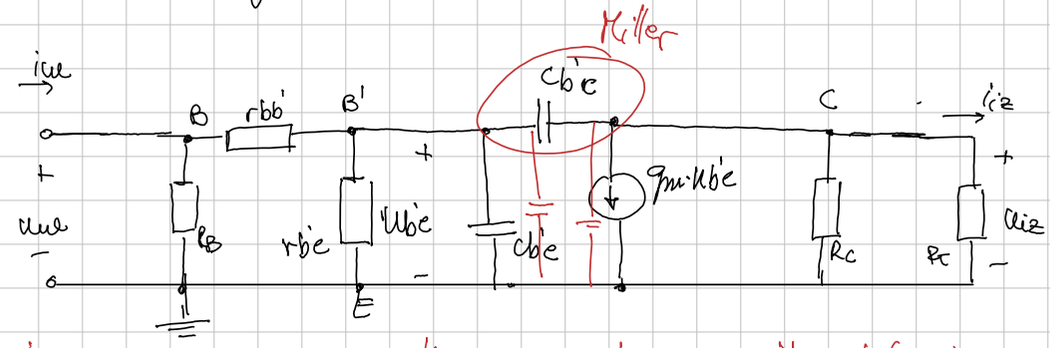

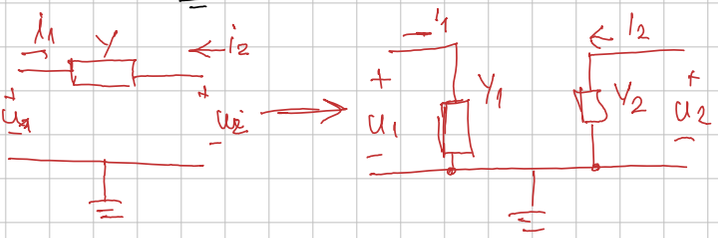

$Y_1 = Y(1-K)$

$Y_2 = Y\,\frac{K-1}{K}$

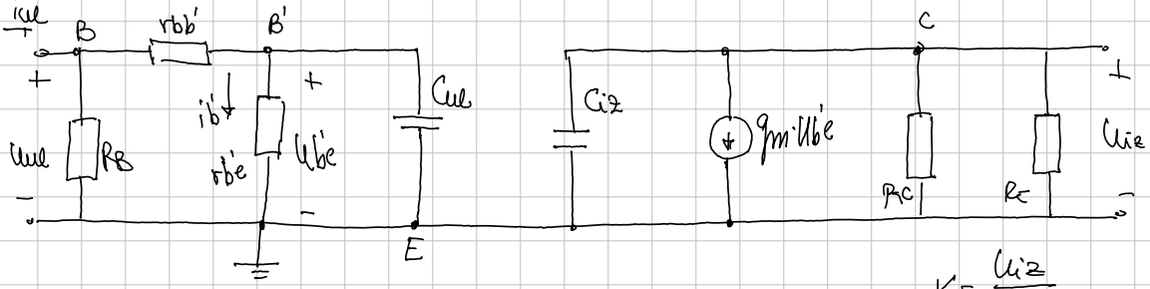

$K = \frac{u_{iz}}{u_{b'e}}$

$k = -g_m(R_c \| R_T)$

$K = -235.5$

$C_{ul} = C_{b'e} + C_{b'c}(1-K)$ $\qquad C_{iz} = C_{b'c}\,\frac{K-1}{K} \approx C_{b'c}$

$\boxed{A_{vo}}$ → na SREDNJIM FREKV. Cul i Ciz se odspajaju jer nisu još krenuli djelovati

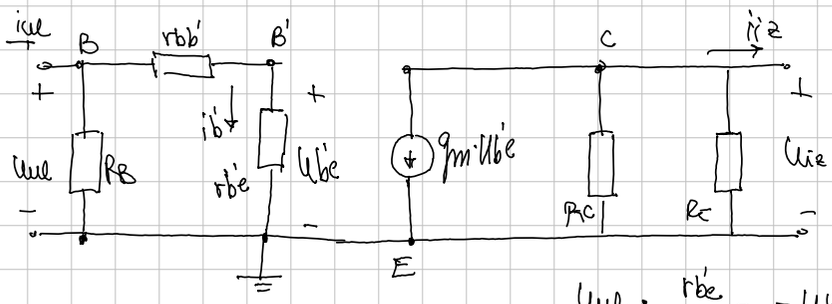

$u_{ul} \cdot \frac{r_{b'e}}{r_{bb'}+r_{b'e}} = u_{b'e}$

$$A_{vo} = \frac{-g_m \cdot u_{b'e}(R_c \| R_T)}{\cancel{u_{b'e}} \cdot \left(\frac{r_{bb'}+r_{b'e}}{r_{b'e}}\right)} \rightarrow A_{vo} = \frac{-g_m(R_c \| R_T)}{\frac{r_{bb'}+r_{b'e}}{r_{b'e}}} = -g_m \cdot r_{b'e}\,\frac{(R_c \| R_T)}{r_{bb'}+r_{b'e}}$$

$\boxed{A_{vo} = -213}$ → $A_{vo}(dB) = 46.57 \angle 180°$

(pos. dio)

$$i_b = i_{ul} \cdot \frac{R_B}{R_B + (r_{bb'} \| r_{b'e})} \qquad -h_{fe} \cdot i_b \frac{R_C}{R_C + R_T} = i_{iz}$$

$$A_{io} = \frac{i_{iz}}{i_b} \cdot \frac{i_b}{i_{ul}} = -h_{fe}\,\frac{R_C}{R_C + R_T} \cdot \frac{R_B}{R_B + (r_{bb'} \| r_{b'e})} \rightarrow A_{io} = -37.25$$

$\boxed{A_{io}\,dB = 31.4 \angle 180°}$

Visoke frekvencije → utjecaj C_{ul} i C_{iz}

C_{ul}: $\dfrac{1}{1+j\frac{\omega}{\omega_{ul}}}$ $\qquad C_{iz} = \dfrac{1}{1+j\frac{\omega}{\omega_{iz}}}$

NAPONSKO

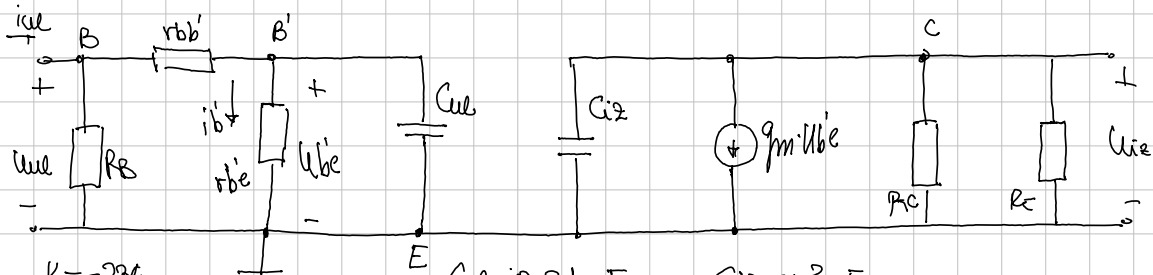

$K = -236.$ $\qquad C_{ul} = 0.81\,nF$ $\qquad C_{iz} \approx 3\,pF$

C_{ul} → $\tau_{ul} = C_{ul} \cdot [r_{bb'} \| r_{b'e}]$ → $\omega_{ul} = \dfrac{1}{\tau_{ul}} = \dots = 27.3 \times 10^6$ rad/s

→ $f_{ul} = 4.34\,MHz$

C_{iz} → $\tau_{iz} = C_{iz}[R_C \| R_T]$

→ $\omega_{iz} = \dfrac{1}{\tau_{iz}} = \dots = 444 \times 10^6$ rad/s

$f_{iz} = 70.7\,MHz$

f_{ul}, f_{iz} → $f_d = f_{ul}$ (min) ✓

razlika je ≥ 4 puta ✓

STRUJNO

C_{ul}

→ i_{ul} = odspajamo jer je strujni

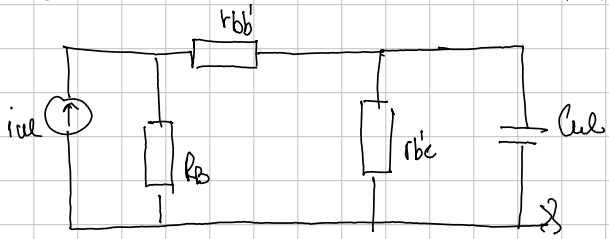

$\tau_{ul_I} = C_{ul}[r_{b'e} \| (R_B + r_{bb'})]$

⇒ $\omega_{ul} = 2.76 \times 10^6$ rad/s

→ $f_{ul} = 440.3\,kHz$

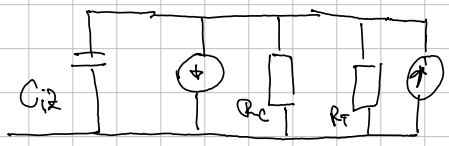

u_{iz} = izlaz → $f_{d_I} = f_{ul_I}$

Zadatak 2.)

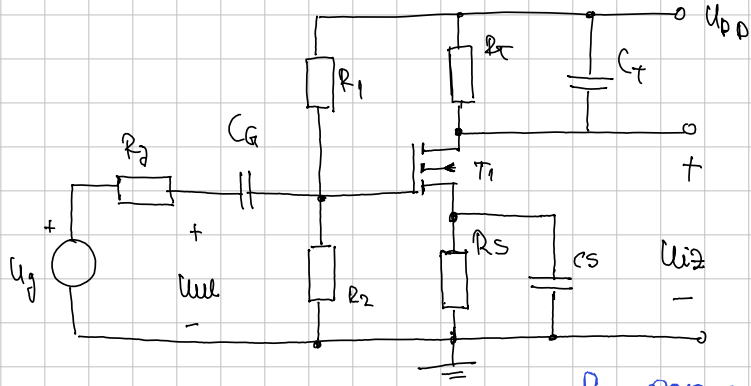

$U_{DD} = 20V$

$R_g = 2k\Omega$

$C_G = 200nF$

$R_1 = 1{,}5M\Omega$

$R_2 = 500k\Omega$

$R_S = 500\Omega$ $\quad C_S = 20\mu F$ $\quad R_T = 3k\Omega$

$K = 0{,}5mA/V^2$ $\quad C_{gs} = 3pF$ $\quad A_{vg0} = ?$ $\quad \omega_g = ?$

$U_{GS0} = -1V$ $\quad C_{gd} = 2pF$ $\quad$ a) $C_T = 0$ $\quad C_T = 50pF$

STATIKA

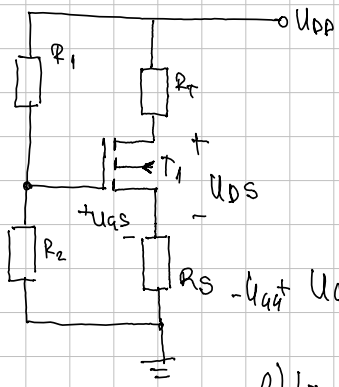

$R_G = R_1 \| R_2 \rightarrow \boxed{R_G = 375k\Omega}$

$U_{GG} = \frac{R_2}{R_1+R_2} \cdot U_{DD} \rightarrow U_{GG} = 5V$

$-U_{GG} + U_{GSQ} = -R_S \cdot I_{DQ} \rightarrow I_{DQ} = \frac{-U_{GSQ}+U_{GG}}{R_S}$

2) $I_{DQ} = \frac{K}{2}(U_{GSQ} - U_{GS0})^2$

$$\frac{2}{K}\left(\frac{-U_{GSQ}}{R_S} + \frac{U_{GG}}{R_S}\right) = U_{GSQ}^2 + 2U_{GSQ} + 1 \rightarrow U_{GSQ}^2 + U_{GSQ}\underbrace{\left(2 + \frac{2}{R_S \cdot K}\right)}_{10} + \underbrace{1 - \frac{2U_{GG}}{K \cdot R_S}}_{-39} = 0$$

$U_{GSQ} = \begin{cases} 3V > U_{GS0} & \ldots \text{NAP} \\ -13V \end{cases}$

$\boxed{I_{DQ} = 4mA}$ $\quad -U_{DD} + I_{DQ}(R_T + R_S) + U_{DSQ} = 0 \rightarrow \boxed{U_{DSQ} = 6V}$

$$g_m = \left.\frac{\partial i_d}{\partial u_{gs}}\right|_Q = K(U_{GSQ} - U_{GS0})\underbrace{(1 + \overset{=0}{\lambda} U_{DSQ})}_{1} \rightarrow \boxed{g_m = 2mA/V}$$

$r_d = \frac{1}{\lambda I_{DQ}} \rightarrow r_d = \infty$

DINAMIKA

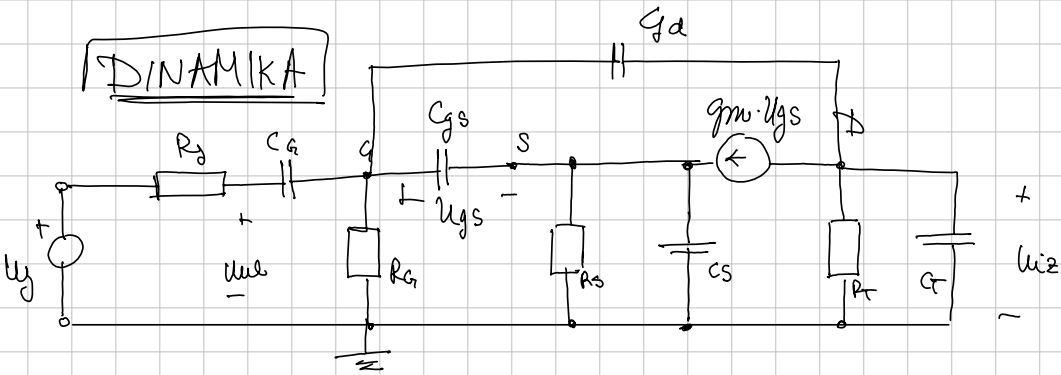

Srednje frekvencije → A_{v0}

→ K.S. svi C → samo „organski" kapaciteti ostaju

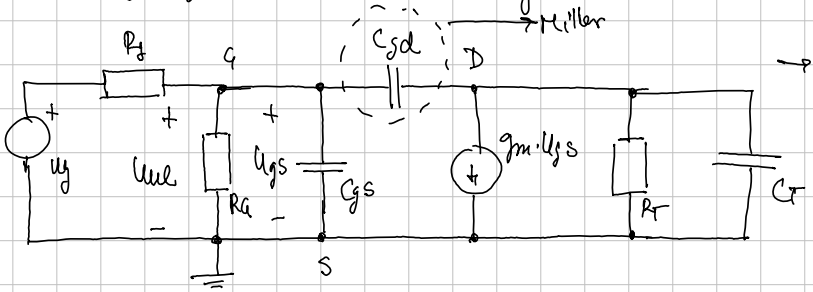

→ C_G i C_S djeluju na niskim → R.S.

ali C_T djeluje na visokim

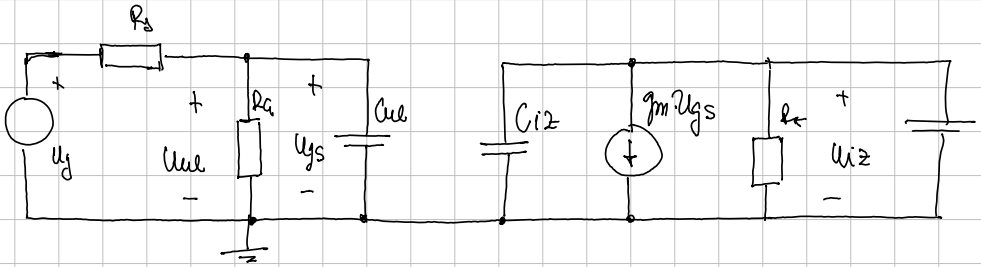

$C_{ul} = C_{gs} + C_{gd}(1-K)$ $\qquad$ $C_{iz} = C_{gd}\frac{K-1}{K}$

→ na srednjim frekv. još ne djeluju C_{ul} i C_{iz}

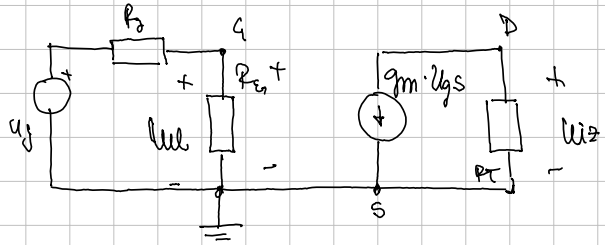

$$A_{v0} = \frac{-g_m \cdot U_{gs} \cdot R_T}{U_{gs}}$$

$$A_{v0} = -g_m \cdot R_T = \dots \rightarrow \boxed{A_{v0} = -6}$$

$A_{v0}(dB) = 15.56\,dB \angle 180°$

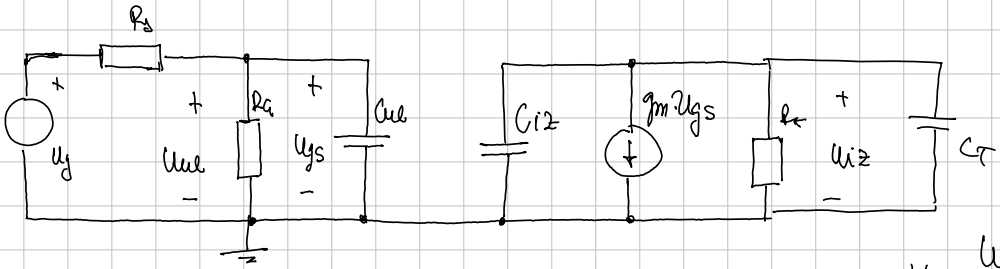

$$K = \frac{u_{iz}}{u_{gs}} = \frac{C_{iz}}{C_{ul}}$$

$$C_{ul} = C_{gs} + \cancel{C_T} + C_{gd}(1-K) \qquad C_{iz} = C_{gd}\frac{K-1}{K} + \cancel{C_T}$$

$$K = -6$$

a) $G=0$

$\boxed{C_{ul}}$ $C_{ul} = \cancel{67pF} = 17pF$

$\boxed{C_{iz}}$ $C_{iz} = \cancel{52.33pF}$ $2,33pF$

→ gledamo Avg → $U_g = K \cdot S$

$$\omega_{ul_g} = C_{ul}\,[R_a \parallel R_g]$$

$$\rightarrow \omega_{ul_g} = 29.57 \times 10^6 \text{ rad/s}$$

$$f_{ul} = 4.7 \text{ MHz}$$

$$\omega_{iz} = C_{iz} \cdot R_T$$

$$\omega_{iz} = 143.1 \times 10^6 \text{ rad/s}$$

$$f_{iz} = 22.77 \text{ MHz}$$

$$\rightarrow f_d = f_{ul} + f_{ul} \cdot 4 < f_{iz}$$

b) $C_T = \ldots pF$

$C_{ul}' = 67pF$

$\omega_{ul_g}' = 7.5 \times 10^6$ rad/s

$f_{ul_g}' = 1.19$ MHz

$C_{iz}' = 52,33pF$

$\omega_{iz_g}' = 6.37 \times 10^6$ rad/s

$f_{iz_g}' = 1.01$ MHz

Ostaje isti, C_T pribrajamo samo C_{ul}!

Uz kapacitivno opterećenj

karakt ω_{iz} se smanjuje za 4 puta

↓

niža je od karakt

$f_d' \rightarrow \omega_{ug}$

$$\Rightarrow \omega_g = \omega_{iz}$$

$$\boxed{f_g = f_{iz}'}$$

Zadatak 3.)